DOOSAN

Construction Equipment

DX360LCA-7M
DX360LC-7M

Photos may include optional equipment

Powered by **Innovation**

Powered by **Innovation**

Certain specification(s) are based on engineering calculations and are not actual measurements. Specification(s) are provided for comparison purposes only and are subject to change without notice.
Specification(s) for your individual Doosan equipment will vary based on normal variations in design, manufacturing, operating conditions, and other factors. Pictures of Doosan units may show other than standard equipment

DOOSAN

Hyundai Doosan Infracore

489 Injung-ro, Dong-gu, Incheon, South Korea
http://global.doosanequipment.com

DIPBE-00-2109

BRING BACK THE SUBSTANTIVE RETURN

DX360LCA-7M and DX360LC-7M

To Reap the Most of What You've Sown

Take On The New Shape Of A Success. Professional Partners For Both Machine Owner And Operator

To get more back what you have invested. DX360LCA-7M and DX360LC-7M represent a new generation of Doosan excavator, with application-based functionality and all-round capability. Newly released DX360LCA-7M and DX360LC-7M, completion of awaited series ready to be shown.

Top performer of all spheres. DX360LCA-7M and DX360LC-7M deliver extensive line of performance with optimally prepared features, to be an efficient support where it counts. Solid structure holding up the dynamic character line, both can be suitable for any rough action. Outstanding productivity, touching and intuitive cabin features along with efficient Doosan services. DX360LCA-7M and DX360LC-7M, make light work of even the toughest challenges in construction site.

Choose between our double feature, either will be an excellent choice. DX360LCA-7M and DX360LC-7M, finally right answers for investment that live up to your expectations.

Doosan will be the lifetime reliable partner to let your business get the most out of what you have invested

EXTENSIVE LINE OF PERFORMANCE

DX360LCA-7M and DX360LC-7M guarantee the best productivity at all job sites. Powered by a reliable Doosan engine, which delivers unparalleled power, while improved hydraulic system get the most out of the engine power. Superior workload along with lifting capacities and traction force, all combined for the overwhelming performance.

WITH A LONG-TERM EFFICIENCY

DX360LCA-7M and DX360LC-7M bring smart and innovative solutions which serve to increase long term profit. A standard auto-idle feature and relief cutoff, optionally available SPC system automatically controls engine RPM and hydraulic system to serve best fuel efficiency.

CARRIED BY A SOLID STRUCTURE

DX360LCA-7M and DX360LC-7M are both featured by reinforced heavy-duty arm and boom with fortified undercarriage to withstand high-impact materials. Take your choice between standard undercover and heavy duty undercover. Both designed using reliable element and formed in optimal structural integrity. Ensuring long life and high uptime even in extreme job sites.

WE ARE BACK WITH NEW FEATURES

All the nice features of previous model bodily succeeded, even nicer things to come.

HEAVY DUTY UNDERCARRIAGE
Heavy duty X- shaped undercarriage with integrated track spring and idler. Offered with durable box section track frame. The sprocket structure and tooth have been strengthened to prevent debris and increase durability.

ADDITIONAL LED WORKING LAMP (OPTIONAL)
New additional working lamp contributes to enhanced safety. Optionally available LED lamp enhances visibility through improved illumination.

SIDE AND REAR VIEW CAMERA
Optional side and rear-view camera keep watch in ways beyond operator's sight. Additional LED lighting system attached on each side for the clear identification.

INCREASED CONTROLLABILITY
Joystick and switches integrated in control stand for precise operation. All switches grouped together and ergonomically positioned to the right.

OIL WASHED PRE-CLEANER (OPTIONAL)
Oil washed-type pre-cleaner provides better filtering in dusty environments. Increase maintenance interval resulting in more uptime.

DOOSANCONNECT® TELEMATICS SERVICE (OPTIONAL)
Offering 'preventive maintenance service' based on machine operating data. Providing an expert level consultation to dealers. Functioning as fleet management tool for the customers.

ETP (ELECTRIC TRANSFER PUMP) (OPTIONAL)
ETP changes speed of front movement depending on the hydraulic flow consumption of attachment usage. Linear and smooth control guaranteed for operational ease.

ADVANCED FILTRATION
Highest efficiency filters remove water, dust & particles to protect your investment optimally.

HEATING AND COOLING SEAT (OPTIONAL, DX360LC-7M)
The optional, air- suspended, climatized driver's suspension seat provides pleasant seating conditions and a high level of comfort.

NEW 8-INCH TOUCH MONITOR (OPTIONAL, DX360LC-7M)
- Bigger LCD monitor with user-friendly touch screen panel
- Allowing easy access to machine settings and maintenance data.

AVM (AROUND VIEW MONITOR) (OPTIONAL, DX360LC-7M)
- Around view monitor enables panoramic view which increases operational efficiency
- Prevents the safety accidents caused by blind spots

STRENGTHENED BOOM AND ARM
Reinforced castings and forged steel pivot points. Reinforced heavy-duty arm and boom with new optional boom floating system. To better protect the base of the arm, reinforced bars have been added and the arm center and end boss have been strengthened.

*Option spec info is included to the images contained in this material and may not be the same with the actual specs.

TOP PERFORMANCE AND PRODUCTIVITY IN CLASS

Complete Performance Solution In a Class of Its Own

DX360LCA-7M and DX360LC-7M will set a new pace for productivity and profit in your operation. Delivering performance which can be adapted to your various needs, both will be a complete solution for any site. Powerful Doosan in-house engine provides excellent force and torque characteristics, while improved hydraulic system get the most out of the engine power.

Professional partners which offer the ideal combination of power and efficiency. With DX360LCA-7M and DX360LC-7M you can take even the heaviest work with ease, along with smart features. EPOS™ hydraulic system ensures the engine power to be exactly delivered.

EPOS™ (ELECTRONIC POWER OPTIMIZING SYSTEM)

The smart EPOS™ provides a perfectly synchronized communication link between the engine's electronic control unit and the hydraulic system. A CAN (Controller Area Network) system enables a constant flow of information between the engine and hydraulic system, to ensure power is delivered exactly as needed.

DOOSAN ENGINE (DX12) - DX360LCA-7M

The DX12 is a whole new mechanical engine built on Doosan's continuously evolving engine technology. Greater engine outputs of 238kW and impressive torque enables to precisely deliver the power you need. Our many years of experience in engine design and production have resulted in both efficient and powerful engine. Delivering greater engine output through various system improvements.

DOOSAN ENGINE (DL08) - DX360LC-7M

"Common Rail" DOOSAN DL08 engine shows a superior performance with excellent fuel efficiency. Outputs of 213kW, it delivers exceptional power and high torque at low revs. Highly effective exhaust after-treatment system reduce emissions without interrupting productivity. Combined with the new EPOS™ electronic control system, the engine contributes for optimum power and fuel saving.

X- CHASSIS UNDERCARRIAGE

X- chassis undercarriage enables increased ground clearance and improved maneuvering ability. Sloped surface design optimized to shed debris and maximize uptime.

INTEGRATED TRACK SPRING AND IDLER

The track spring and idler have been joined directly for even greater durability and improved maintenance convenience.

CUTTING EQUIPMENT ISSUES IN HALF

Tested and Reliable, Free of Equipment Problems
Trusty Partner for Lifetime Working

DX360LCA-7M and DX360LC-7M cut off the source of probable troubles by consummate quality. The fortified front and robust track are responsible for all demands. Computer assisted design technique applied to remote possibilities in hydraulic system and frame structures.

DX360LCA-7M and DX360LC-7M are trusty partner with outstanding reliability proven by undergoing strenuous tests. Every component is engineered for uptime and extensively tested to validate its performance. Enhanced durability achieved through applying highly robust materials to structures of overall frames. The lasting technology, with structural design through analysis enable Doosan's equipment to last under the harshest conditions.

Heavy Duty Boom and Arm

The strong and durable structure includes a reinforced boom and arm made from high strength tensile steel for maximum reliability. Combined with thicker material, mechanical stress is equally distributed and both reliability and component life are increased. To better protect the base of the arm, reinforced bars have been added and the arm center.

EM BUSHING

The boom pivot is made with a highly lubricated metal to increase the lifespan and extend greasing intervals to 250 hours. cancellation and anti seizure property. Used polymer shim with hard metal disk for less abrasion.

ABRASION-RESISTANT ARM END DISK

New disks have been adopted to increase wear resistance and service intervals.

PRINCIPLE OF LOW COST -HIGH RETURN

A Series of Features All Aimed for Greater Efficiency, Topped on Economy and Long-Term Sustainability

To make your operations more cost-effective and profitable, the new DX360LCA-7M and DX360LC-7M have been designed with a special emphasis on efficiency.

A standard auto-idle feature which automatically puts the engine and pump into the standby mode when it detects a pause. Doosan's engine and pump matching technology, not only economical but also environmentally responsive with significantly reduced exhaust fumes. Regulation and precise control of the flow rate required by the equipment are available as standard. Smart power control system, which is available in DX360LC-7M, guarantees maximum efficiency with predictive powertrain control. DX360LCA-7M and DX360LC-7M's comprehensive range of innovative technology ensure to do more with low fuel consumption and overall operating costs.

PUMP MATCHING TECHNOLOGY

Engine and pump matching, resolves problems as the low response time of the system and unnecessary fuel consumption. Matching the response time between pump and engine efficiently reduces unnecessary fuel consumption as well as reducing exhaust fumes.

RELIEF CUTOFF

DX360LCA-7M and DX360LC-7M are equipped with a relief cutoff system. The system automatically detects excess hydraulic pressure in the cylinder and controls it by redirecting the hydraulic flow back to the main pump. Relief cutoff system distributes excessive pressure in hydraulic components to be maintained in the optimal state.

AUTO IDLE

A standard auto-idle feature reduces engine rpm when the steering wheel or joystick isn't being used. The system automatically puts the engine and pump into the standby mode when it detects a pause during operation. The engine will be automatically switched off when the machine is inactive for a pre-set amount of time. This function helps reduce fuel consumption by lowering idling RPM.

VBO (VIRTUAL BLEED OFF) SYSTEM

VBO system is Doosan's own hydraulic system based on "Doosan electronic controlled pump"

Generally, most excavators use hydraulic system, transferring the energy by using hydraulic flow. In order to facilitate the rapid response to the joystick signal, this hydraulic flow is continuously generated from the pump even when the excavator is not in operation. On the contrary, VBO system 'virtually' generates the hydraulic flow through the electronic sensor. Due to its means, customer can be benefited from VBO system in every way. Not to mention the fuel efficiency and the safe sustenance of the system, but also immediate response and familiar controllability, the strength of existing hydraulic system.

SPC (SMART POWER CONTROL) SYSTEM (DX360LC-7M)

SPC is a predictive powertrain control system, which automatically identifies working mode and adjusts engine RPM to supply proper pump torque. To Reduce the unnecessary waste of fuel consumption, it analyzes and manages gear steps and the set the speed. Raising the pump torque when productivity and power is needed. Lowering the pump torque down to reduce when fuel efficiency is needed. SPC relieves the driver's workload and contributes to a fuel-efficient working style.

SERENITY IN TOUGH JOB SITE

The Ideal Workspace Perfectly Packaged For Both Untiring Work and Serene Break

Operator's condition makes or breaks the whole productivity of the site. DX360LCA-7M and DX360LC-7M's cabin would give operator the strength to go on. Designed to meet operational need thoroughly, with excellent visibility and improved safety.

Nothing would be missed if you are with smart operator assistance features. DX360LCA-7M and DX360LC-7M included everything you could possibly need for your task. The high-definition display puts everything you need to know. Integrated switches and an intuitive joystick for optimum controllability. For both bodily comfort and peace of mind, DX360LCA-7M and DX360LC-7M are designed with with spacious interior, ergonomic seat and comfortable features. Work will be altogether more pleasant with cabin optimally prepared for both energetic work and relaxed break.

1. SMALL DETAILS ADD THE FEELING OF REFINEMENT

Heating and ventilation, Air conditioning system upgraded for pleasant environment. USB charger and sunglass case is also equipped for additional comfort. Rear sun visor is also equipped for UV protection.

2. SPACIOUS CABIN COMFORT

Refined interior with enhanced legroom and extendable storage space guarantees a serene ride to you. A more orderly interior Equipped with high-class designed upholstery and thoroughly changed comfort accessories. This ensures operator to have a clear and uncluttered workplace at all times.

3. HEATING AND COOLING SEAT (OPTIONAL)

The optional, air-suspended, climatized driver's suspension seat provides pleasant seating conditions and a high level of comfort. Heating and cooling temperature range segmented in three stage to meet various customer needs.

4. ERGONOMICALLY DESIGNED WORK PEDAL

Ergonomically designed Work pedals placed at both ends. Pedal angle adjusted to relieve the pressure on ankle and joints, Reducing fatigue and to lessen the load of operator

5. ADDITIONAL WORKING LED LAMP

New additional working lamp contributes to enhanced safety through improved illumination.

6. REAR VIEW CAMERA (OPTIONAL)

Optional rear-view camera increases safety by giving visibility beyond operator's sight. Additional LED lighting system attached on each side for the clear identification.

7. AVM (AROUND VIEW MONITOR) (OPTIONAL)

The images can be viewed on a monitor in the interior of the cab. The operator can directly view the area around equipment, when changing implements. Also can have a perfect view of the front structure.

8. SIMPLE OPERATION

Precise control of the equipment increases versatility, safety and facilitates tricky operations requiring great precision. Leveling operations and the movement of lifted load made easier and safer. Joystick and Switches integrated in control stand for precise operation.

* Option spec info is included to the images contained in this material and may not be the same with the actual specs.

REGULAR CHECK BY SIMPLIFIED MAINTENANCE

A Short Cut to Long-Term Gain, Cutting Cost and Extending Uptime

Easy to operate and simple to repair. Carrying out regular check and maintaining equipment is essential in order to sustain maximum performance and productivity. DX360LCA-7M and DX360LC-7M are always poised for action with short maintenance operations and increased service interval of many components.

Centralized grease inlets are designed for simple routine maintenance. Extensive service network and expert assistance are also readily available, Doosan CONNECT provides you the operational machine data in an hourly cycle and broad range of service to get the most productivity out of your equipment.

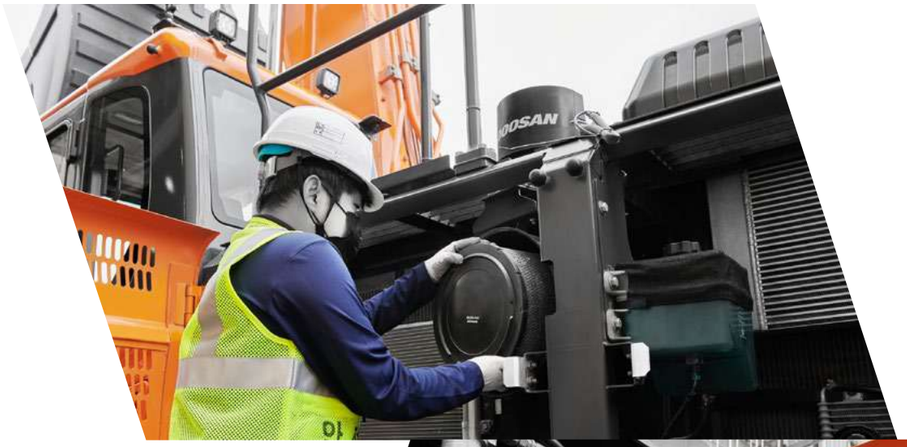

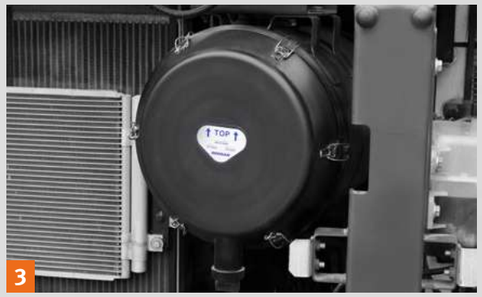

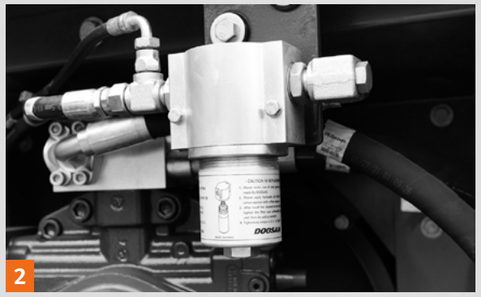

1. CONVENIENT FUSE BOX

The fuse box is located in the storage compartment behind the seat, providing an organized environment and convenient access.

2. HYDRAULIC OIL RETURN FILTER

Glass fiber filter technology filtering out up to 99.5 % of impurities, increasing oil change interval.

3. AIR CLEANER

Air cleaner of large capacity removes 99% of airborne particles, reducing the risk of engine contamination.

4. WATER SEPARATOR

Highly efficient water separator in fuel to prevent engine damage by removing moisture. Reducing the risk of external engine contamination and lengthen the engine's lifespan.

5. PRE-CLEANER

Rotor type dry pre-cleaner attached as a standard option.

6. CENTRALIZED GREASE INLETS FOR EASY MAINTENANCE

The boom & arm grease inlets are grouped for easy access. Remote grease points make it easier to lubricate hard-to-reach pins on the lift arm and articulation system.

7. ETP (ELECTRIC TRANSFER PUMP) (OPTIONAL)

Use this switch to easily refill fuel for your machine after its inspection or repair.

8. DOOSAN CONNECT (OPTIONAL)

Allowing various parameters to be checked during maintenance procedure, such as pump pressure and engine rotation speed. Parameters can be stored and printed for subsequent analysis.

DoosanCONNECT® Telematics Service (OPTIONAL)

TELECOMMUNICATIONS Data flow from machine to web

TELEMATICS SERVICE TERMINAL

Telematics Service terminal is installed to machine / connected to EPOS™

TELECOMMUNICATION

GPS, EPOS™ data is sent to sedignated server by GSM, Satellite telecommunication

DOOSAN TELEMATICS SERVICE WEB

Doosan, Dealer, Customer can easily monitor the GPS, EPOS™ data from Core Telematics Service web

TELEMATICS SERVICE BENEFITS Doosan and dealer support customers to improve work efficiency with timely and responsive services

CUSTOMER

Improve work efficiency
- Timely and preventive service
- Improve operator's skills by comparing work pattern
- Manage fleet more effectively

DEALER

Better service for customers
- Provide better quality of service
- Maintain machine value
- Better understanding of market needs

DOOSAN

Responsive to customer's voice
- Utilize quality-related field data
- Apply customer's usage profile to deveping new machine

FUNCTIONS(WEB/APP) Doosan Telematics Service provides various functions to support your great performance

• GPS

• Fuel information

• Preventive maintanance

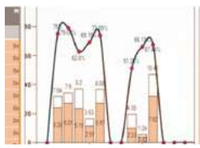

• Operation hours

• Fault code/warning

• ADT Productivity

• Reports

FUNCTION		EXCAVATOR	WHEEL LOADER	ADT
GPS	· Location · Geo-fence	All models	All models	All models
Operation hours	· Daily, Weekly, Monthly report	All models	All models	All models
Operation hours	· Total operation hours · Operation hours by mode	All models Tier 4 only	All models	All models
Maintenance parts	· Preventive maintenance by item replacement cycle	All models	Tier 4 only	All models
Fault code/ Warning	· Fault code · Machine Warnings on Gauge Panel	All models	Tier 4 only	All models
Fuel information	· Fuel level · Fuel consumption	All models Tier 4 only	Tier 4 only	All models
Dump capacity	· Dump tonnage · Count of Work Cycle	N/A	N/A	All models

GLOBAL PARTS NETWORK

QUALITY-PROVEN MAIN COMPONENTS

Doosan provides fast and precise worldwide delivery of genuine Doosan parts through its global PDC (parts distribution center) network.

GLOBAL NETWORK

The global network of the GPDC (Global Parts Distribution Center) maximizes its supply rate by making sure that each center is stockpiled with all the critical parts required for businesses in its area. The network also minimizes the time and costs required for parts delivery by positioning PDCs close to major markets around the world. Doosan PDCs communicate with customers in their time zone, informing them that they are open for operation, and deliver parts to them as early as possible.

THE GLOBAL PARTS DISTRIBUTION CENTER NETWORK

PDCs had been set up as shown below, including Mother PDC in Ansan, Korea. The nine other PDCs include one in China (Yantai), Four in USA (Seattle and Atlanta, Suwanee, Miami), two in Europe (Germany and the UK), one in the Middle East (Dubai) and one in Asia (Singapore).

PDC BENEFIT

Distribution Cost Reduction | **Maximum Parts supply rate** | **Shortest distance/ time parts delivery** | **Real-time service support** | **Minimum downtime**

TECHNICAL SPECIFICATION (DX360LCA-7M)

ENGINE

Model

Doosan DX12
2 valves per cylinder, vertical injectors, water cooled, turbo charged with air to air intercooler. The emission levels are well below the values required for phase II.

Number of cylinders

6

Nominal flywheel power

238 kW (319 HP) @ 1,800rpm (SAE J1995, gross)
233 kW (312 HP) @ 1,800rpm (SAE J1349, net)

Max torque

1,400 N.m @ 1,200 rpm

Piston displacement

11,051 cc (353 cu.in)

Bore & stroke

123 mm x 155 mm (4.8" x 6.1")

Starter

24 V / 7.0 kW

Batteries

2 X 12 V / 150 Ah

Air cleaner

Double element with auto dust evacuation.

HYDRAULIC CYLINDERS

The piston rods and cylinder bodies are made of high-strength steel. A shock absorbing mechanism is fitted in all cylinders to ensure shockfree operation and extend piston life.

Cylinders	Quantity	Bore x Rod diameter x stroke
Boom	2	150 x 100 x 1,450 mm
Arm	1	170 x 120 x 1,805 mm
Bucket	1	150 x 100 x 1,300 mm

ARM DIGGING FORCE

Arm	Length (mm)	Weight (kg)	Digging Force (Nom./ Press.Up, ton)
STD.	3,200	1,285	[SAE] 17.6 / 18.6, [ISO] 17.9 / 19.0, [KN] 176 / 186
SHORT	2,600	1,170	[SAE] 21.6 / 22.8, [ISO] 22.1 / 23.4, [KN] 217 / 229
LONG	3,950	1,496	[SAE] 14.9 / 15.8, [ISO] 15.1 / 16.0, [KN] 148 / 157
HD.	3,200	1,365	[SAE] 17.6 / 18.6, [ISO] 17.9 / 19.0, [KN] 176 / 186

HYDRAULIC SYSTEM

The heart of the system is the EPOS™ (Electronic Power Optimizing System). It allows the efficiency of the system to be optimized for all working conditions and minimizes fuel consumption.

- The hydraulic system enables independent or combined operations.
- Two travel speeds offer either increased torque or high speed tracking.
- Cross-sensing pump system for fuel savings.
- Auto deceleration system.
- Two operating modes, two power modes.
- Button control of flow in auxiliary equipment circuits.
- Computer-aided pump power control.

Main pumps

2 variable displacement axial piston pumps
Max flow: 2 x 350 l/min

Pilot pump

Gear pump - max flow: 24.12 l/min

Maximum system pressure

Boom/arm/Bucket :
Normal mode : 350 kgf/cm^2
Power mode : 370 kgf/cm^2
Travel : 350 kgf/cm^2
Swing : 286 kgf/cm^2

SWING MECHANISM

- An axial piston motor with two-stage planetary reduction gear is used for the swing.
- Increased swing torque reduces swing time.
- Internal induction-hardened gear.
- Internal gear and pinion immersed in lubricant bath.
- The swing brake for parking is activated by spring and released hydraulically.

Swing speed : 0 to 9.3 rpm

BUCKET DIGGING FORCE

Bucket Type	Capacity (m^3) SAE	DIGGING FORCE (NOM/PRESS UP, TON)
G.P.	1.25 / *1.28 / 1.49 / 1.61 / 1.83	[SAE] 21.7 / 22.9 [ISO] 24.5 / 25.9
H CLASS	1.44 / 1.66 / 1.81 / 2.03 / **2.03 / 2.32	[SAE] 22.3 / 23.6 [ISO] 24.7 / 26.1
S CLASS	***1.71 / 1.71 / 1.92 / 2.22	[SAE] 21.7 / 22.9 [ISO] 24.7 / 26.1
X CLASS	1.56 / 1.71	

* : Rock Bucket ** : H+ Class ***: S+ Class

WEIGHT 6,500 mm(21'5") HD Boom, 3,200 mm (10'6") HD Arm, 1.81 m^3 (2.37 yd^3) H Class Bucket

Shoe Type	Shoe width	Operating weight	Ground pressure (kgf/cm^2)
TG	600 mm (2')	37,600 kg (82,893 lb)	0.72 kgf/cm^2
DG	600 mm (2')	21,700 kg (83,996 lb)	0.73 kgf/cm^2
TG	700 mm (2' 4")	38,000 kg (83,776 lb)	0.63 kgf/cm^2
TG	800 mm (2' 6")	38,300 kg (84,437 lb)	0.55 kgf/cm^2
TG	850 mm (2' 8")	38,500 kg (84,878 lb)	0.52 kgf/cm^2
TG	900 mm (3')	22,300 kg (85,319 lb)	0.50 kgf/cm^2

UNDERCARRIAGE

Chassis are of very robust construction, all welded structures are designed to limit stresses. High-quality material used for durability. Lateral chassis welded and rigidly attached to the undercarriage. Track rollers lubricated for life, idlers and sprockets fitted with floating seals.

Tracks shoes made of induction-hardened alloy with double grouser. Heat-treated connecting pins. Hydraulic track adjuster with shock-absorbing tension mechanism.

Number of rollers and track shoes per side

Upper rollers : 2 (standard shoes)
Lower rollers: 9
Shoes : 48
Total length of track : 4,960 mm (16' 3")

DRIVE

Each track is driven by an independent axial piston motor through a planetary reduction gearbox.
Two levers with control pedals guarantee smooth travel with counterrotation on demand.

Travel speed (fast/slow)

5.5 / 3.4 km/h (3.4 / 2.1 mph)

Maximum traction force

18.7 / 30.7 ton

Maximum grade

35 (70%)

ENVIRONMENT

Noise levels comply with environmental regulations (dynamic values).

Sound level guarantee

110 DB (A) (2000/14/EC)

Cab sound level

74 DB (A) (ISO 6396)

REFILL CAPACITIES

Fuel tank

600 L (158.5 US gal)

Cooling system (Radiator capacity)

65.6 L (17.3 US gal)

Engine oil

31 L (8.1 US gal)

Swing drive

8 L (2.11 US gal)

Final drive
(each =Travel Device = travel motor + travel reduction gear)

2 X 7 L (2 X 1.85 US gal)

Hydraulic tank

380 L (100.3 US gal)

BUCKET

Bucket Type	Capacity (m^3)	Bucket Width (mm)		Weight (kg)	6.5m MONO Boom			6.2 MONO Boom
	SAE/PCSA	W/cutter	W/O Cutter		2.6 Arm	3.2 Arm	3.95 Arm	2.6 A
GP	1.25	1,278	1,228	1,249	A	A	A	A
	*1.28	-	1,382	1,427	A	A	A	A
	1.49	1,460	1,410	1,344	A	A	B	A
	1.61	1,550	1,500	1,392	A	B	C	A
	1.83	1,718	1,688	1,522	B	C	D	A
H Class	1.44	1,272	1,238	1,389	A	A	B	A
	1.66	1,428	1,394	1,489	A	B	C	A
	1.81	1,534	1,500	1,588	B	C	D	A
	2.03	1,684	1,650	1,684	C	D	D	B
	**2.03	1,684	1,650	1,820	C	D	-	B
	2.32	1,892	1,858	1,817	D	D	-	C
S Class	1.56	-	1,352	1,893	A	C	D	A
	***1.71	-	1,452	2,104	B	C	-	B
	1.71	-	1,452	1,973	B	C	D	A
	1.92	-	1,602	2,094	C	D	-	B
	2.22	-	1,809	2,309	D	-	-	D
X Class	1.56	1,370	1,352	2,050	B	C	D	A
	1.71	1,470	1,452	2,136	B	D	-	B

* : Rock Bucket ** : H+ Class ***: S+ Class
Based on ISO 10567 and SAE J296, arm length without quick change clamp
A : Suitable for materials with density of 2,100kg/m^3 (3,500 lb/yd) or less
B : Suitable for materials with density of 1,800kg/m^3 (3,000 lb/yd) or less
C : Suitable for materials with density of 1,500kg/m^3 (2,500 lb/yd) or less
D : Suitable for materials with density of 1,200kg/m^3 (2,000 lb/yd) or less
X : Not recommended

DIMENSIONS (DX360LCA-7M)

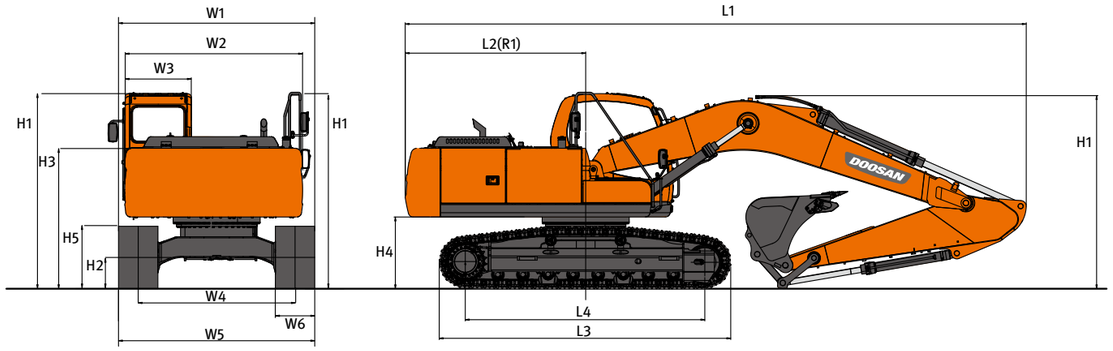

DIMENSIONS

Model				DX360LCA-7M			
Dimension				STD	OPT1	OPT2	OPT3
Boom				mm	6,500 HD	6,500 HD	6,500	6,200
Arm				mm	3,200 HD	2,600	3,950	2,600
Bucket (PCSA)				m^3	1.81 R2H	2.03 R2H	1.44 R2H	2.03 R2H
Undercarriage (Track+Grouser)				mm	LC 600 TG	LC 600 TG	LC 600 TG	LC 600 TG
Overall	L1	Overall Length		mm	11,315	11,405	11,343	11,105
	H1	Overall Height	Boom	mm	3,255	3,495	3,315	3,605
			Hose	mm	3,420	3,640	3,565	3,705
			Cabin	mm	3,100	3,100	3,100	3,100
	W1	Overall Width (SHIPPING)		mm	3,280	3,280	3,280	3,280
	L2 (R1)	Rear Swing Radius		mm	3,530	3,530	3,530	3,530
	H2	Ground Clearance*		mm	*475	*475	*475	*475
Swing Body	W2	House Width	Frame only	mm	2,990	2,990	2,990	2,990
			w/Protector	mm	3,103	3,103	3,103	3,103
	W3	Cabin Width		mm	1,010	1,010	1,010	1,010
	H3	Height Over Cover		mm	2,240	2,240	2,240	2,240
	H4	Counterweight Clearance*		mm	*1,160	*1,160	*1,160	*1,160
Undercarriage	H5	Track Height*		mm	*970	*970	*970	*970
	L3	Track Length		mm	*4,960	*4,960	*4,960	*4,960
	L4	Tumbler Distance		mm	4,040	4,040	4,040	4,040
	W4	Track Gauge		mm	2,680	2,680	2,680	2,680
	W5	Undercarriage Width	STD	mm	3,280	3,280	3,280	3,280
	W6	Shoe Width		mm	600	600	600	600
		Grouser Height		mm	36	36	36	36
CAB	-	Cabin Height		mm	853	853	853	853

*Grouser 미포함

WORKING RANGES (DX360LCA-7M)

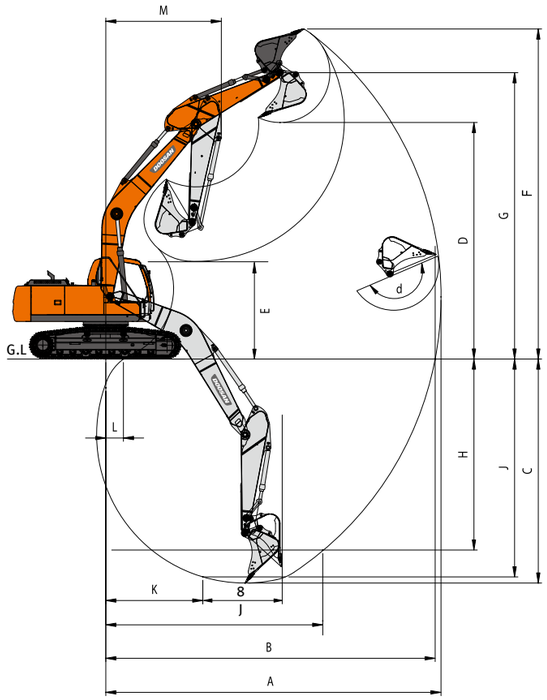

WORKING RANGE

BOOM LENGTH		mm	6,500			6,200
ARM TYPE		mm	2,600	(Std.) 3,200	3,950	2,600
	BUCKET TYPE (SAE / PCSA)	m^3	2.03 H	(Std.) 1.81 H	1.44 H	2.03 H
A	MAX. DIGGING REACH	mm	10,540	11,120	11,930	10,235
B	MAX. DIGGING REACH (GROUND)	mm	10,325	10,920	11,740	10,020
C	MAX. DIGGING DEPTH	mm	6,885	7,485	8,290	6,670
D	MAX. DUMPING HEIGHT	mm	8,605	7,220	7,635	6,640
E	MIN. DUMPING HEIGHT	mm	3,380	2,755	2,000	3,105
F	MAX. DIGGING HEIGHT	mm	9,910	10,215	10,815	9,585
G	MAX. BUCKET PIN HEIGHT	mm	8,605	8,875	9,335	8,295
H	MAX. VERTICAL WALL DEPTH	mm	3,715	4,020	6,830	3,525
I	MAX. RADIUS VERTICAL	mm	8,760	9,265	9,885	8,530
J	MAX. DIGGING DEPTH(8'LEVEL)	mm	6,650	7,295	8,156	6,430
K	MIN. RADIUS 8' LINE	mm	3,260	3,310	3,380	3,045
L	MIN. DIGGING REACH	mm	2,245	795	-290	1,825
M	MIN. SWING RADIUS	mm	4,445	4,455	4,515	4,325
D.	BUCKET ANGLE (DEG)	°	178.4	178.4	178.4	178.4

STANDARD & OPTION (DX360LCA-7M)

STANDARD EQUIPMENT

Boom & Arm

- 6.5 m Boom (Heavy duty)
- 3.2 m Arm (Heavy duty)

Hydraulic system

- Boom and arm flow regeneration
- Boom and arm holding valves(MCV)
- Swing anti-rebound valves
- Spare ports (Control valve)
- One-touch power boost

Cabin & Interior

- All weather sound suppressed type cab
- Air conditioner & Heater
- Adjustable suspension seat with head rest and adjustable arm rest
- Pull-up type front window and removable lower front window
- Room light
- Intermittent windshield wiper
- Cup holder
- Hot & Cool box
- LCD color monitor panel
- E/G RPM control dial
- AM/FM radio + MP3 (USB)
- Remote radio ON/OFF switch
- 12V,24V power socket
- Serial communication port for laptop PC interface
- Joystick lever with 3 switches

Safety

- Large handrails and step
- Convex metal anti-slip plates
- Seat belt
- Hydraulic safety lock lever
- Safety glass
- Hammer for emergency escape
- Right and left rearview mirrors
- Travel alarm

Others

- Double element air cleaner
- Additional water separator
- Dry type pre cleaner
- Fuel filter
- Dust screen for radiator/oil cooler
- Engine overheat prevention system
- Engine restart prevention system
- Self-diagnostic system
- 60A Alternator (24V, 50 amps)
- Electric horn
- Halogen working lights (frame mounted 1, boom mounted 2)
- Hydraulic track adjuster
- Track guards
- Greased and sealed track link
- Hydraulic oil tank air breather filter
- Long & Fixed track
- Counterweight (7.1 Ton)

OPTIONAL EQUIPMENT

Some of optional equipments may be standard in some markets. Some of this optional equipment is not available in some markets. You must check with the local DOOSAN dealer to know about the availability or to release the adaptation following the needs of the applications

Boom & Arm

- 6.2 m Boom
- 6.5 m Boom
- 6.5 m Boom (Heavy duty)
- 2.6 m Arm
- 3.2 m Arm
- 3.95 m Arm
- 3.2 m Arm (Heavy duty)

Safety

- Boom and arm hose rupture protection valve
- Overload warning device
- FOGS (ISO 10262, FOGS standard)
- Travel & swing alarm
- Rotating beacon
- Rear lamp
- LED lights
- Side & Rear view camera

Cabin & Interior

- Air suspension seat
- Rain Shield
- High seat Mount
- Breaker pedal
- Cabin front guard (Upper and lower guard)
- Steel roof cover
- Additional mirror
- DAB Audio

Others

- Piping option
  - Piping for Crusher
  - Piping for Breaker
  - Piping for Quick clamp
- Shoe (mm)
  600 DG / 700 TG / 800 TG / 850 TG / 900 TG / 600 DG
- Lower wiper
- 60A/80A alternator
- Fuel filler pump
- Working Lights
  - 4-front / 2-rear on cabin
  - 2-front on cabin
  - 1 on counterweight
- Hydraulic Oil
  - Cold weather (VG32)
  - Normal (VG46)
  - Tropical weather (VG68)
- Breaker filter
- Water separator with heater
- Heavy duty under cover
- Short & Fixed track
- Heavy duty & Fixed track

TECHNICAL SPECIFICATION (DX360LC-7M)

ENGINE

Model

Doosan DL08
2 valves per cylinder, vertical injectors, water cooled, turbo charged with air to air intercooler. The emission levels are well below the values required for phase iii.

Number of cylinders

6

Nominal flywheel power

213 KW (286 HP) @ 1,900rpm (SAE J1995, gross)
209 KW (280 HP) @ 1,900rpm (SAE J1349, net)

Max torque

1,275 N.m @ 1,500 rpm

Piston displacement

7,640 cc (466 cu.in)

Bore & stroke

108 mm x 139 mm (4.2" x 5.5")

Starter

24 V / 6 kW

Batteries

2 X 12 V / 150 Ah

Air cleaner

Double element with auto dust evacuation.

HYDRAULIC CYLINDERS

The piston rods and cylinder bodies are made of high-strength steel. A shock absorbing mechanism is fitted in all cylinders to ensure shockfree operation and extend piston life.

Cylinders	Quantity	Bore x Rod diameter x stroke
Boom	2	150 x 100 x 1,450 mm
Arm	1	170 x 120 x 1,805 mm
Bucket	1	150 x 100 x 1,300 mm

ARM DIGGING FORCE

Arm	Length (mm)	Weight (kg)	Digging Force (Nom./ Press.Up, ton)
STD.	3,200	1,285	[SAE] 17.6 / 18.6, [ISO] 17.9 / 19.0, [KN] 176 / 186
SHORT	2,600	1,170	[SAE] 21.6 / 22.8, [ISO] 22.1 / 23.4, [KN] 217 / 229
LONG	3,950	1,496	[SAE] 14.9 / 15.8, [ISO] 15.1 / 16.0, [KN] 148 / 157
HD.	3,200	1,365	[SAE] 17.6 / 18.6, [ISO] 17.9 / 19.0, [KN] 176 / 186

HYDRAULIC SYSTEM

The heart of the system is the EPOS™ (Electronic Power Optimizing System). It allows the efficiency of the system to be optimized for all working conditions and minimizes fuel consumption.

- The hydraulic system enables independent or combined operations.
- Two travel speeds offer either increased torque or high speed tracking.
- Cross-sensing pump system for fuel savings.
- Auto deceleration system.
- Two operating modes, two power modes.
- Button control of flow in auxiliary equipment circuits.
- Computer-aided pump power control.

Main pumps

2 variable displacement axial piston pumps
Max flow: 2 x 350 l/min

Pilot pump

Gear pump - max flow: 24.12 l/min

Maximum system pressure

Boom/arm/Bucket :
Normal mode : 350 kgf/cm²
Power mode : 370 kgf/cm²
Travel : 350 kgf/cm²
Swing : 286 kgf/cm²

SWING MECHANISM

- An axial piston motor with two-stage planetary reduction gear is used for the swing.
- Increased swing torque reduces swing time.
- Internal induction-hardened gear.
- Internal gear and pinion immersed in lubricant bath.
- The swing brake for parking is activated by spring and released hydraulically.

Swing speed : 0 to 9.3 rpm

BUCKET DIGGING FORCE

Bucket Type	Capacity (m³) SAE	DIGGING FORCE (NOM/PRESS UP, TON)
G.P.	1.25 / *1.28 / 1.49 / 1.61 / 1.83	[SAE] 21.7 / 22.9 [ISO] 24.5 / 25.9
H CLASS	1.44 / 1.66 / 1.81 / 2.03 / **2.03 / 2.32	[SAE] 22.3 / 23.6 [ISO] 24.7 / 26.1
S CLASS	***1.71 / 1.71 / 1.92 / 2.22	[SAE] 21.7 / 22.9 [ISO] 24.7 / 26.1
X CLASS	1.56 / 1.71	

* : Rock Bucket ** : H+ Class ***: S+ Class

WEIGHT 6,500 mm(21'5") HD Boom, 3,200 mm (10'6") HD Arm, 1.81 m³ (2.37 yd³) H Class Bucket

Shoe Type	Shoe width	Operating weight	Ground pressure (kgf/cm²)
TG	600 mm (2')	37,700 kg (83,114 lb)	0.73 kgf/cm²
DG	600 mm (2')	38,300 kg (83,437 lb)	0.74 kgf/cm²
TG	700 mm (2' 4")	38,100 kg (83,996 lb)	0.63 kgf/cm²
TG	800 mm (2' 6")	38,500 kg (84,878 lb)	0.56 kgf/cm²
TG	850 mm (2' 8")	38,700 kg (85,319 lb)	0.52 kgf/cm²
TG	900 mm (3')	38,900 kg (85,760 lb)	0.50 kgf/cm²

UNDERCARRIAGE

Chassis are of very robust construction, all welded structures are designed to limit stresses. High-quality material used for durability. Lateral chassis welded and rigidly attached to the undercarriage. Track rollers lubricated for life, idlers and sprockets fitted with floating seals.

Tracks shoes made of induction-hardened alloy with double grouser. Heat-treated connecting pins. Hydraulic track adjuster with shock-absorbing tension mechanism.

Number of rollers and track shoes per side

Upper rollers : 2 (standard shoes)
Lower rollers: 9
Shoes : 48
Total length of track : 4,960 mm (16' 3")

DRIVE

Each track is driven by an independent axial piston motor through a planetary reduction gearbox.
Two levers with control pedals guarantee smooth travel with counterrotation on demand.

Travel speed (fast/slow)

5.5 / 3.4 km/h (3.4 / 2.1 mph)

Maximum traction force

18.7 / 30.7 ton

Maximum grade

35 (70%)

ENVIRONMENT

Noise levels comply with environmental regulations (dynamic values).

Sound level guarantee

110 DB (A) (2000/14/EC)

Cab sound level

74 DB (A) (ISO 6396)

REFILL CAPACITIES

Fuel tank

600 L (158.5 US gal)

Cooling system (Radiator capacity)

65.6 L (17.3 US gal)

Engine oil

31 L (8.1 US gal)

Swing drive

8 L (2.11 US gal)

Final drive
(each =Travel Device = travel motor + travel reduction gear)

2 X 7 L (2 X 1.85 US gal)

Hydraulic tank

380 L (100.3 US gal)

BUCKET

Bucket Type	Capacity (m³)	Bucket Width (mm)		Weight (kg)	6.5m MONO Boom			6.2 MONO Boom
	SAE/PCSA	W/cutter	W/O Cutter		2.6 Arm	3.2 Arm	3.95 Arm	2.6 A
GP	1.25	1,278	1,228	1,249	A	A	A	A
	*1.28	-	1,382	1,427	A	A	A	A
	1.49	1,460	1,410	1,344	A	A	B	A
	1.61	1,550	1,500	1,392	A	B	C	A
	1.83	1,718	1,688	1,522	B	C	D	A
H Class	1.44	1,272	1,238	1,389	A	A	B	A
	1.66	1,428	1,394	1,489	A	B	C	A
	1.81	1,534	1,500	1,588	B	C	D	A
	2.03	1,684	1,650	1,684	C	D	D	B
	**2.03	1,684	1,650	1,820	C	D	-	B
	2.32	1,892	1,858	1,817	D	D	-	C
S Class	1.56	-	1,352	1,893	A	C	D	A
	***1.71	-	1,452	2,104	B	C	-	B
	1.71	-	1,452	1,973	B	C	D	A
	1.92	-	1,602	2,094	C	D	-	B
	2.22	-	1,809	2,309	D	-	-	D
X Class	1.56	1,370	1,352	2,050	B	C	D	A
	1.71	1,470	1,452	2,136	B	D	-	B

* : Rock Bucket ** : H+ Class ***: S+ Class
Based on ISO 10567 and SAE J296, arm length without quick change clamp
A : Suitable for materials with density of 2,100kg/m³ (3,500 lb/yd) or less
B : Suitable for materials with density of 1,800kg/m³ (3,000 lb/yd) or less
C : Suitable for materials with density of 1,500kg/m³ (2,500 lb/yd) or less
D : Suitable for materials with density of 1,200kg/m³ (2,000 lb/yd) or less
X : Not recommended

DIMENSIONS (DX360LC-7M)

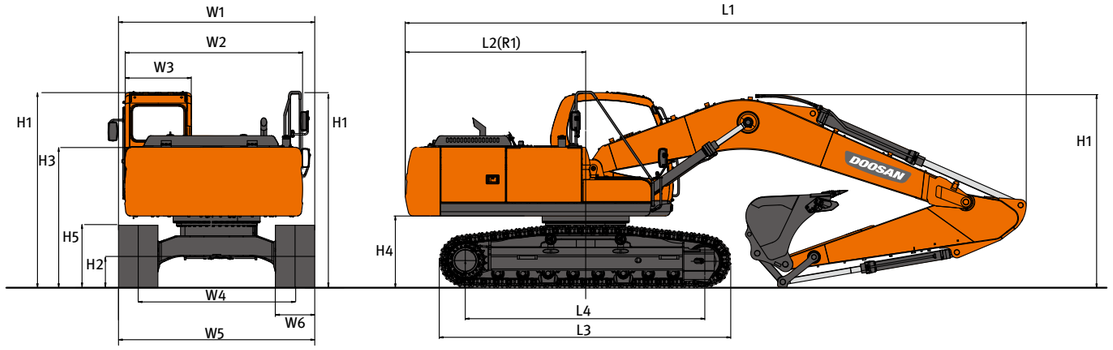

DIMENSIONS

Model				DX360LC-7M			
Dimension				STD	OPT1	OPT2	OPT3
Boom				mm	6,500 HD	6,500 HD	6,500	6,200
Arm				mm	3,200 HD	2,600	3,950	2,600
Bucket (PCSA)				m^3	1.81 R2H	2.03 R2H	1.44 R2H	2.03 R2H
Undercarriage (Track+Grouser)				mm	LC 600 TG	LC 600 TG	LC 600 TG	LC 600 TG
Overall	L1	Overall Length		mm	11,315	11,405	11,343	11,105
	H1	Overall Height	Boom	mm	3,255	3,495	3,315	3,605
			Hose	mm	3,420	3,640	3,565	3,705
			Cabin	mm	3,100	3,100	3,100	3,100
	W1	Overall Width (SHIPPING)		mm	3,280	3,280	3,280	3,280
	R1	Rear Swing Radius		mm	3,530	3,530	3,530	3,530
	H2	Ground Clearance*		mm	*475	*475	*475	*475
Swing Body	W2	House Width	Frame only	mm	2,990	2,990	2,990	2,990
			w/Protector	mm	3,103	3,103	3,103	3,103
	W3	Cabin Width		mm	1,010	1,010	1,010	1,010
	H3	Height Over Cover		mm	2,240	2,240	2,240	2,240
	H4	Counterweight Clearance*		mm	*1,160	*1,160	*1,160	*1,160
Undercarriage	H5	Track Height*		mm	*970	*970	*970	*970
	L3	Track Length		mm	*4,960	*4,960	*4,960	*4,960
	L4	Tumbler Distance		mm	4,040	4,040	4,040	4,040
	W4	Track Gauge		mm	2,680	2,680	2,680	2,680
	W5	Undercarriage Width	STD	mm	3,280	3,280	3,280	3,280
	W6	Shoe Width		mm	600	600	600	600
		Grouser Height		mm	36	36	36	36
CAB	-	Cabin Height		mm	853	853	853	853

*Grouser 미포함

WORKING RANGES (DX360LC-7M)

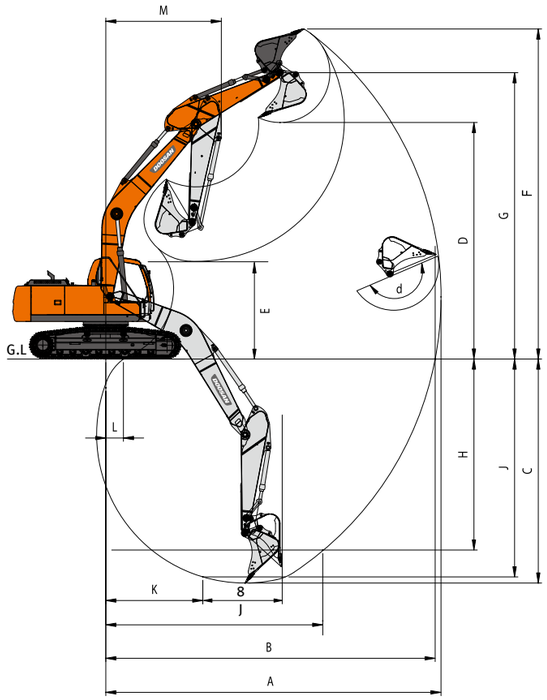

WORKING RANGE

BOOM LENGTH		mm	6,500			6,200
ARM TYPE		mm	2,600	(Std.) 3,200	3,950	2,600
	BUCKET TYPE (SAE / PCSA)	m^3	2.03 H	(Std.) 1.81 H	1.44 H	2.03 H
A	MAX. DIGGING REACH	mm	10,540	11,120	11,930	10,235
B	MAX. DIGGING REACH (GROUND)	mm	10,325	10,920	11,740	10,020
C	MAX. DIGGING DEPTH	mm	6,885	7,485	8,290	6,670
D	MAX. DUMPING HEIGHT	mm	8,605	7,220	7,635	6,640
E	MIN. DUMPING HEIGHT	mm	3,380	2,755	2,000	3,105
F	MAX. DIGGING HEIGHT	mm	9,910	10,215	10,815	9,585
G	MAX. BUCKET PIN HEIGHT	mm	8,605	8,875	9,335	8,295
H	MAX. VERTICAL WALL DEPTH	mm	3,715	4,020	6,830	3,525
I	MAX. RADIUS VERTICAL	mm	8,760	9,265	9,885	8,530
J	MAX. DIGGING DEPTH(8'LEVEL)	mm	6,650	7,295	8,156	6,430
K	MIN. RADIUS 8' LINE	mm	3,260	3,310	3,380	3,045
L	MIN. DIGGING REACH	mm	2,245	795	-290	1,825
M	MIN. SWING RADIUS	mm	4,445	4,455	4,515	4,325
D.	BUCKET ANGLE (DEG)	°	178.4	178.4	178.4	178.4

STANDARD & OPTION (DX360LC-7M)

STANDARD EQUIPMENT

Boom & Arm

- 6.5 m Boom (Heavy duty)
- 3.2 m Arm (Heavy duty)

Hydraulic system

- Boom and arm flow regeneration
- Boom and arm holding valves(MCV)
- Swing anti-rebound valves
- Spare ports (Control valve)
- One-touch power boost

Cabin & Interior

- All weather sound suppressed type cab
- Air conditioner & Heater
- Adjustable suspension seat with head rest and adjustable arm rest
- Pull-up type front window and removable lower front window
- Room light
- Intermittent windshield wiper
- Cup holder
- Hot & Cool box
- LCD color monitor panel
- E/G RPM control dial
- AM/FM radio + MP3 (USB)
- Remote radio ON/OFF switch
- 12V,24V power socket
- Serial communication port for laptop PC interface
- Joystick lever with 3 switches

Safety

- Large handrails and step
- Convex metal anti-slip plates
- Seat belt
- Hydraulic safety lock lever
- Safety glass
- Hammer for emergency escape
- Right and left rearview mirrors
- Travel alarm

Others

- Double element air cleaner
- Additional water separator
- Dry type pre cleaner
- Fuel filter
- Dust screen for radiator/oil cooler
- Engine overheat prevention system
- Engine restart prevention system
- Self-diagnostic system
- 60A Alternator (24V, 50 amps)
- Electric horn
- Halogen working lights (frame mounted 1, boom mounted 2)
- Hydraulic track adjuster
- Track guards
- Greased and sealed track link
- Hydraulic oil tank air breather filter
- Long & Fixed track
- Counterweight (7.1 Ton)
- ROPS Cabin

OPTIONAL EQUIPMENT

Some of optional equipments may be standard in some markets. Some of this optional equipment is not available in some markets. You must check with the local DOOSAN dealer to know about the availability or to release the adaptation following the needs of the applications

Boom & Arm

- 6.2 m Boom
- 6.5 m Boom
- 6.5 m Boom (Heavy duty)
- 2.6 m Arm
- 3.2 m Arm
- 3.95 m Arm
- 3.2 m Arm (Heavy duty)

Safety

- Boom and arm hose rupture protection valve
- Overload warning device
- FOGS (ISO 10262, FOGS standard)
- Travel & swing alarm
- Rotating beacon
- Rear lamp
- LED lights
- Side & Rear view camera
- Around View Monitor

Cabin & Interior

- Air suspension seat
- Rain Shield
- High seat Mount
- Breaker pedal
- Cabin front guard (Upper and lower guard)
- Steel roof cover
- Additional mirror
- DAB Audio

Others

- Piping option
  - Piping for Crusher
  - Piping for Breaker
  - Piping for Quick clamp
- Shoe (mm)
  600 DG / 700 TG / 800 TG / 850 TG / 900 TG / 600 DG
- Lower wiper
- 60A/80A alternator
- Fuel filler pump
- Working Lights
  - 4-front / 2-rear on cabin
  - 2-front on cabin
  - 1 on counterweight
- Hydraulic Oil
  - Cold weather (VG32)
  - Normal (VG46)
  - Tropical weather (VG68)
- Breaker filter
- Water separator with heater
- Heavy duty under cover
- Short & Fixed track
- Heavy duty & Fixed track